MPL-III-1047/10~50uJ/1-300mW

LD PUMPED ALL-SOLID-STATE Q-SWITCHED LASER at 1047 nm

All solid state Q-switched laser at 1047 nm has the features of high peak power, high repetition rate, and short pulse duration, which is widely used in industry (marking on the diamond or stone), teaching of nonlinear optics, fiber communication, etc.

SPECIFICATIONS

Wavelength (nm)		1047±1
Operating mode		Q-switched pulsed laser
Single pulse energy (μJ)		10~50
Pulse duration (ns)		~10
Peak power (W)		~4500
Rep. rate (kHz)	Controllable	Specified One rep. rate, such as 1k, 2k, 3k, up to 4kHz, with stable laser pulses emitting (stable pulse energy, peak, duration and period).
		Different rep. rate in the range of 1Hz-4kHz can be obtained by input an external TTL signal.
	Uncontrollable	Undefined rep. rate among 4k-5kHz and unstable laser pulse emitting. Suitable for the applications only needing high peak power pulses.
Average power (mW)		Average power (mW) = Single pulse energy (μJ) * Rep. rate (kHz)
Ave power stability (over 4 hours)		<1%, <3%, <5%
Transverse mode		TEM_{00}
Warm-up time (minutes)		<10
M^2 factor		<1. 2
Beam divergence, full angle (mrad)		<1.5
Beam diameter at $1/e^2$ (mm)		~1.5
Beam height from base plate (mm)		24.8
Operating temperature (℃)		10~35
Power supply (90-264VAC)		PSU-III-FDA
Expected lifetime (hours)		10000
Warranty period		1 year

MxL-III-1047	Dimensions	PSU-III-FDA	Dimensions
140. 8(L)×73(W) ×46. 2(H) mm^3, 0.6kg	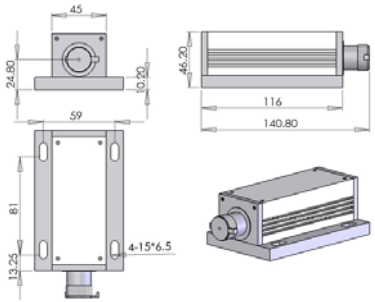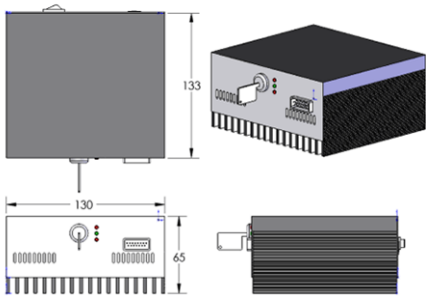	133 (L) ×130(W) ×65 (H) mm^3, 1.2kg